PRECISION CIRCUITS INC

WIRING DIAGRAM
Momentum by Grand Design
8-27-2015

Exact Location of Breakers not Critical As long as Water Heater & A/C-RR are on opposite phases of Line Voltage.

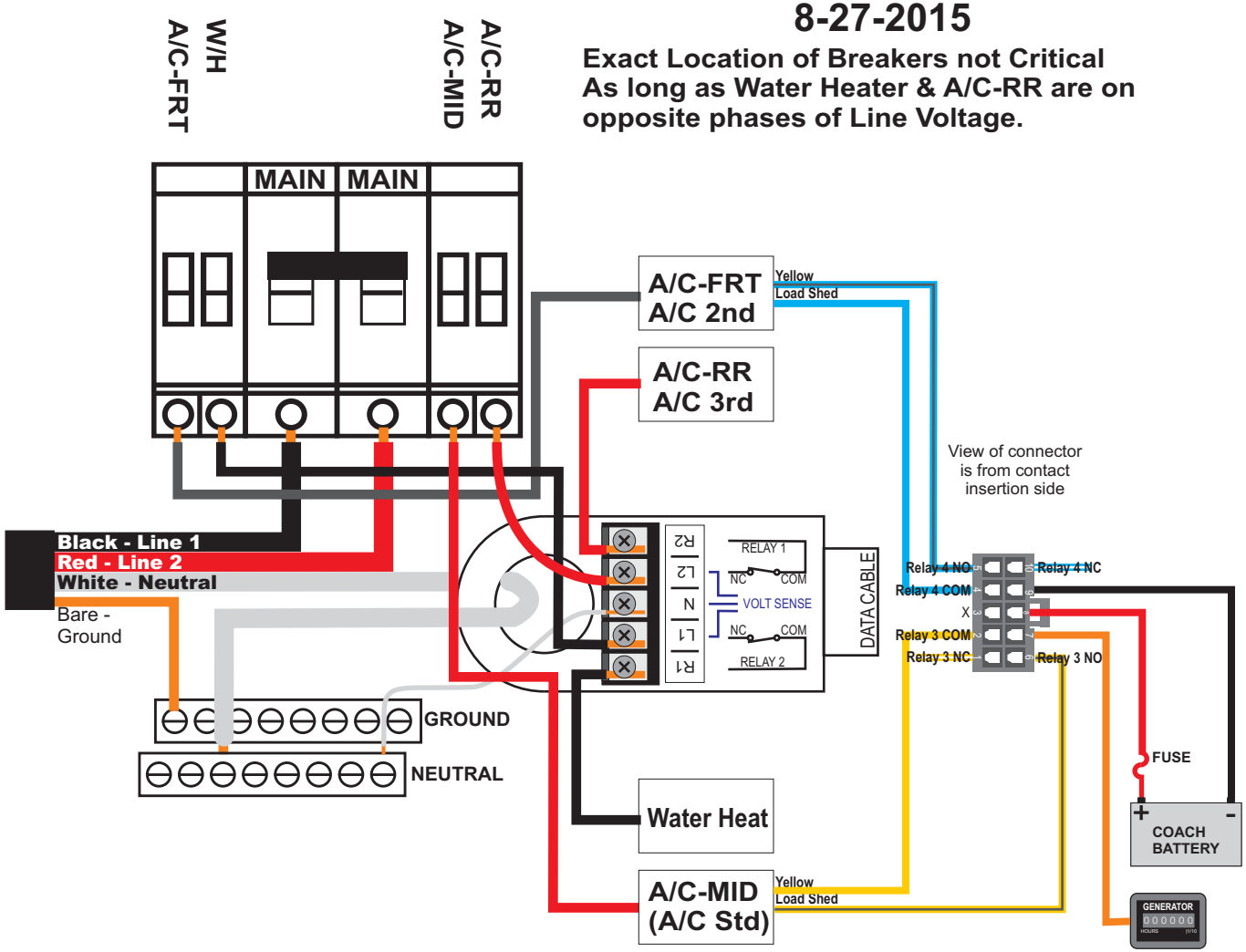

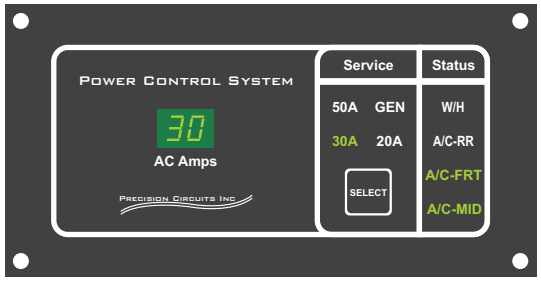

Program Options:
Relay Shed Order:
1-W/H
2-A/C-RR
4-A/C-FRT
3-A/C-MID
50A Service = Sleep Mode
GEN =44amps Current Limit